Renewable and Sustainable Energy Reviews 72 (2017) 1019–1032

Contents lists available at ScienceDirect

Renewable and Sustainable Energy Reviews

journal homepage: www.elsevier.com/locate/rser

Economic assessment of concentrated solar power technologies: A review

Alexander W. Dowling, Tian Zheng, Victor M. Zavala*

Department of Chemical and Biological Engineering, University of Wisconsin-Madison, 1415 Engineering Dr, Madison, WI 53706, USA

ARTICLE INFO

Keywords:
Concentrated solar power
Energy storage
Economics
Levelized cost of electricity
Dynamics
Flexibility

ABSTRACT

This paper surveys economic assessments of concentrated solar power (CSP) technologies and finds two dominant assessment methods. A majority of studies reported in the literature are based on the levelized cost of electricity (LCOE), while a small subset of studies consider time-varying meteorological and electricity market conditions. Several studies argue that LCOE undervalues dynamic flexibility provided by thermal energy storage and does not consider revenue opportunities provided by electricity markets at different time scales. As a result, some studies find that both LCOE and revenue can in fact be conflicting metrics for certain designs and market conditions. This review finds strong variations in LCOE and revenue estimates in the literature. As comparisons between CSP and other generation technologies (e.g., fossil, wind, and photovoltaic) are dictated by the chosen economic metric, it is imperative that policy and investment decisions should carefully consider time-varying effects and flexibility. Finally, research directions are proposed to increasing the fidelity of economic assessments and to mitigate discrepancies.

1. Introductory remarks

Concentrated solar power (CSP) technologies harness thermal energy from the sun to drive a thermodynamic cycle. Thermal energy storage (TES) is realized through the addition of tanks, which allows CSP systems to generate electricity at times of little or no solar irradiance. This includes operating 24-h a day (baseline generation) or adjusting electricity generation during times of increased demand and high prices. The economics of CSP systems depend on the selected operating mode, regional subsidies, solar availability, and market prices for electricity and electricity services. This paper reviews different techno-economic methodologies and assessments for CSP systems, with an emphasis on the value of flexibility provided by TES and other design considerations.

1.1. CSP technologies

There are four different types of solar collector designs: parabolic troughs, heliostats (for power towers), linear Fresnel lenses, and dish receivers. The first two are the most prominent for large installations. In parabolic trough systems, shown in Fig. 1, heat is transferred from the solar collectors (loop 1) to the thermodynamic cycle (loop 2). Optionally, the first loop may contain hot and warm storage (thermal storage) tanks for the heat transfer fluid or a supplemental fossil fuel boiler or both. In the second loop, the input heat is used to generate high pressure steam (or heat another working fluid such as an organic mixture), which is expanded in turbines to generated electrical power. In power tower systems, solar energy is reflected from a field of mirrors (heliostats) onto a central receiver (the power tower). This design allows for higher levels of concentrations and higher working fluid temperatures, and thus higher thermodynamic cycle efficiencies. Optionally, both parabolic troughs and power tower systems may directly heat high pressure steam [1–3] or another working fluid as part of a Brayton cycle [4]. The selection of heat transfer fluid and storage system depends on operating temperatures. Synthetic oils and similar heat transfer fluids experience rapid degradation at temperatures above 400 °C [5–7], and thus are typically found in parabolic trough systems only. In contrast, molten salts are suitable for higher temperatures, but solidify at ambient conditions and this complicates operations. The typical operating conditions and cycle efficiencies for these two categories of CSP systems are given in Table 1. Additional CSP process details are provided in several review papers [7–12].

Several aspects of CSP technologies provide flexibility at multiple timescales. For example, TES enables CSP systems to delay electricity generation to subsequent hours and days. Similar, the steam cycle provides ramping flexibility, around 3% per minute for generic Rankine cycles, that allows for minute-by-minute adjustments. Electric heaters for electricity buy-back [14,15] provide flexibility on the order of seconds. CSP systems may exploit this spectrum of flexibility by transacting energy and energy services on multiple timescales, resulting in a diverse stream of revenues.

* Corresponding author.
E-mail addresses: adowling2@wisc.edu (A.W. Dowling), victor.zavala@wisc.edu (V.M. Zavala).

http://dx.doi.org/10.1016/j.rser.2017.01.006
Received 4 June 2016; Received in revised form 5 November 2016; Accepted 3 January 2017
Available online 16 February 2017
1364-0321/

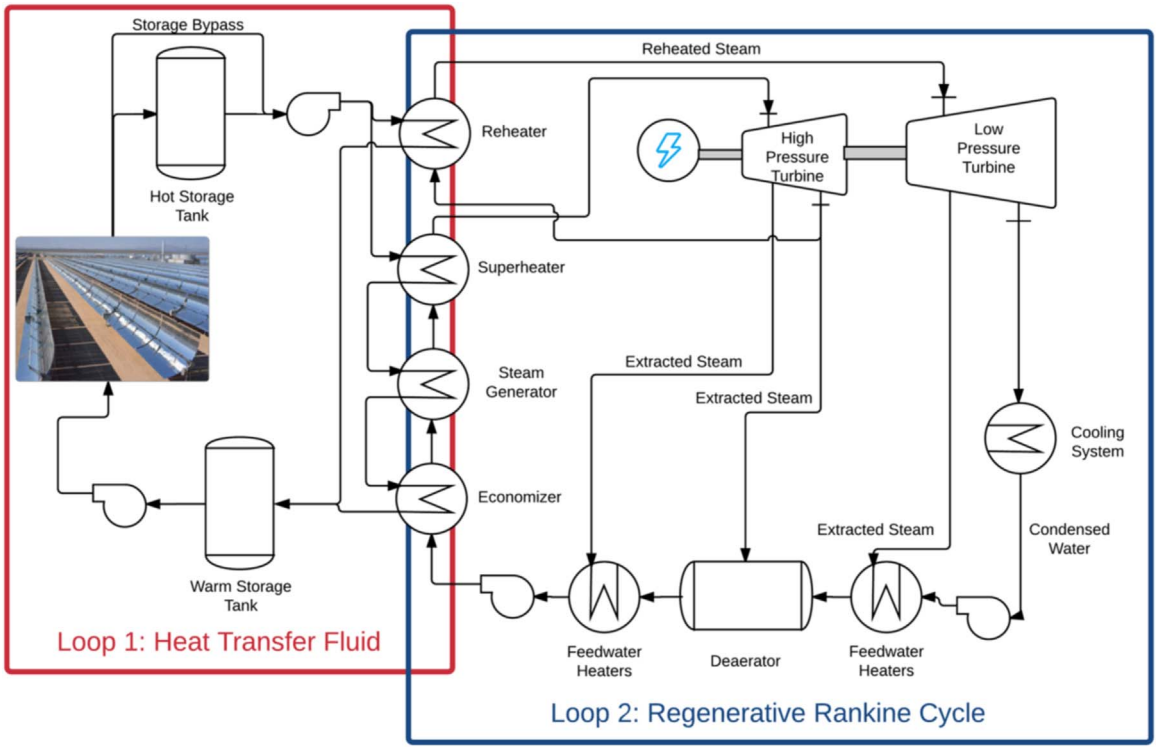

Fig. 1. Parabolic trough CSP systems contain two interconnected loops. In the first loop, heat transfer fluid (e.g., Dowtherm A) is circulated through the solar collectors, where it is heated, and either sent to the hot storage tank or immediately used to generate steam. After transferring heat to the loop 2, the cooled heat transfer fluid is sent to the warm storage tank. The second loop is a standard regenerative Rankine cycle, where the economizer, steam generator, superheater, and reheater are heated with the heat transfer fluid. Other standard steam cycle equipment, including a condenser, feedwater heaters, and deaerator are also used.

1.2. Economic assessment methods

Two types of economic assessment methodologies are popular for CSP technologies. The simplest and most common economic metric is **Levelized Cost of Electricity** (LCOE), defined as the required revenue (dollars per unit energy) needed to recover operating and investment costs for a specific generator design over a specified length of time. Joskow [16] succinctly demonstrated that LCOE analysis does not capture the time-varying value of electricity. In particular, the author compared dispatchable (90% capacity factor) and intermittent (30% capacity factor) energy sources in a two-tier electricity market (on- and off-peak prices). Despite the near identical LCOEs, intermittent systems presented negative profits (losses of $42 k to $45k per MW_e per year) when most of the energy is provided during off-peak. This represents wind turbines producing electricity at night. In contrast, the dispatchable source was moderately profitable ($8 k per MW_e per year) and the intermittent source was highly profitable ($87 k per MW_e per year) when all of the energy is supplied during on-peak hours. To test if this critique is valid for real systems, we analyzed California real-time energy market prices from 2015 (http://oasis.caiso.com/) and found similar results: shifting 10 MW_e of generation from the average price (30 $/MWh) to the 1% most extreme prices (97 to 1621 $/MWh) yields additional revenues of $400,000/yr. This represents a 6% increase in revenue for a hypothetical 50 MW_e CSP system operating at 50% capacity factor and selling energy at the average market price. Several authors have expressed criticisms of LCOE comparisons and have demonstrated that certain CSP design modifications that increase LCOE also lead to short pay-off periods when the time-varying value of electricity is taken into account [14,15].

Alternately, net present value (NPV), return on investment (ROI), and similar financial metrics are computed by estimating revenues from historical electricity prices, government subsidies, and meteorological data. This more accurately captures the time-varying value of delivered energy and offers a more holistic analysis for potential investors. A few studies also consider supplemental revenue from ancillary service provisions, such as regulation and spinning reserves, available to CSP generators with TES. For example, Madaeni et al. [17] determined that providing spinning reserves increased CSP annual revenues by 17% compared to the case in which only energy arbitrage is performed (i.e., generation is adjusted based on time-varying energy prices). Based on data from the California markets, we determine a hypothetical CSP system providing 10 MW_e of regulation capacity for all hours of 2015 would have received $500,000/yr in regulation capacity payments alone. The dispatchability of CSP systems with regard to energy and ancillary services depend on the size of the TES system. Thus the flexibility from TES is undervalued in LCOE analyses.

Revenues estimates from time-varying meteorological and price data depend on the selected operating policy and CSP design decisions

Table 1
Comparison of CSP technologies.

Collector Type	Heat Transfer Fluid	Max. Temp.	Solar-to-Electricity Efficiency
Parabolic Trough	Synthetic Oil	480 °C [5,6]; 400 °C [7]	13.6% [13]; 18% [5]; 16.1% [6]; 14% [7]
Parabolic Trough	Dowtherm A	400 °C [10]	11–16% [10]
Parabolic Trough	Direct Steam Gen.	400 °C [1,2]	8–12% [1]; 10–15% [2]
Power Tower	Molten Salt	650 °C [10]; 565 °C [7]	7–20% [10]; 14% [7]
Power Tower	Direct Steam Gen.	600 °C [1]; 680 °C [5]; 565 °C [7]	12–18% [1];13.8% [5]; 13.6% [7]

Table 2
Survey of CSP LCOE estimates in literature, organized by collector technology. Consistent with the nomenclature in [12], ^{B} indicates the alternate heat source only used for backup purposes, such as cloudy weather, whereas ^{H} marks a hybrid design where both solar and the alternate heat source are used in normal operation to generate electricity. The working fluid for Brayton/topping cycle is included in the parentheses if known. Temperatures are also given after the cycle type, if reported.

Key	First Author	Year	Ref	Location	Collector Technology	Cycle Details	Heat Transfer Fluid	Storage Technology	Alternate Heat Source	LCOE ($/MWh)	Time Frame
Aso-a-P-SO	Astolfi	2011	[13]	U.S.A.	Par. Trough	Organic Rankine; 145 °C	Synthetic Oil	None	None	166.59–194.35	2006
Aso-*b*-P-SO	Astolfi	2011	[13]	Italy	Par. Trough	Organic Rankine; 145 °C	Synthetic Oil	None	None	255.44–308.74	2006
Bee-a-P	Beerbaum	2000	[38]	India	Par. Trough	Rankine	unspecified	None	None	89–122	2000
Bou-a-a-P-SO	Boukelia	2015a	[32]	Algeria	Par. Trough	Rankine; 296–393 °C	Synthetic Oil	Direct 2-tank	Fossil Fuel^{B}	78.5–116.2	2014
Bou-a-*b*-P-MS	Boukelia	2015a	[32]	Algeria	Par. Trough	Rankine; 286–550 °C	Molten Salt	Direct 2-tank	Fossil Fuel^{B}	75.9–102.9	2014
Bou-*b*-a-P-SO	Boukelia	2015b	[33]	Algeria	Par. Trough	Rankine; 296–393 °C	Synthetic Oil	Direct 2-tank	Fossil Fuel^{B}	101.3	2014
Bou-*b*-b-P-MS	Boukelia	2015b	[33]	Algeria	Par. Trough	Rankine; 286–550 °C	Molten Salt	Direct 2-tank	Fossil Fuel^{B}	75.5–128.8	2014
Chi-a-P-U	Chien	2011	[1]	China	Par. Trough	Rankine; 100–400 °C	unspecified	unspecified	None	70–100	2005–2020
Her-a-P-MS	Hernández-Moro	2013	[39]	U.S.A.	Par. Trough	Rankine	Molten Salt	unspecified	None	110–270	2010–2050
Her-*b*-P-MS	Hernández-Moro	2013	[39]	U.S.A.	Par. Trough	Rankine	Molten Salt	unspecified	None	130–320	2010–2050
Her-c-P-MS	Hernández-Moro	2013	[39]	U.S.A.	Par. Trough	Rankine	Molten Salt	unspecified	None	150–380	2010–2050
Jan-a-P-SO	Janjai	2011	[5]	Thailand	Par. Trough	Rankine; 480 °C	Synthetic Oil	Stratified Tank	None	300	2003
Kay-a-P	Kaygusuz	2011	[2]	Turkey	Par. Trough	Rankine	unspecified	None	None	56–91	2010
Kur-P-SO	Kuravi	2013	[10]	U.S.A.	Par. Trough	Rankine; 400 °C	Dowtherm A	Direct 2-tank	None	10.0–50.0	2012–2020
Lil-a-P-SO	Lilliestam	2012	[40]	Spain	Par. Trough	Rankine; 393 °C	Dowtherm A	Indirect 2-tank	None	270–300	2008
Lil-*b*-P-SO	Lilliestam	2012	[40]	U.S.A.	Par. Trough	unspecified; 393 °C	Dowtherm A	unspecified	None	290	2007
Mor-P-SO	Morin	2011	[6]	U.S.A.	Par. Trough	Rankine; 400 °C	Synthetic Oil	Direct 2-tank	None	147.7–157.1	2010
Pur-a-P-MS	Purohit	2010	[3]	Spain	Par. Trough	Rankine; 400 °C	Molten Salt	unspecified	None	140–430	2010
Shi-P-SO	Shinnar	2007	[41]	U.S.A.	Par. Trough	unspecific; 399–427 °C	Dowtherm A	Indirect 2-tank	Natural Gas^{B}	62.1	2003
Tur-a-P-SO	Turchi	2010	[34]	U.S.A.	Par. Trough	Rankine; 391 °C	Synthetic Oil	Stratified Tank	None	165–179	2010–2015
Tur-*b*-P-MS	Turchi	2010	[34]	U.S.A.	Par. Trough	Rankine; 450–500 °C	Molten Salt	Stratified Tank	None	99–142	2015–2020
Wag-a-P-MS	Wagner	2014	[36]	U.S.A.	Par. Trough	Rankine; 225–393 °C	Molten Salt	Direct 2-tank	None	190–240	2009
Wag-*b*-P-MS	Wagner	2014	[36]	U.S.A.	Par. Trough	Rankine; 225–393 °C	Molten Salt	Direct 2-tank	None	160–220	2009
Wag-c-P-MS	Wagner	2014	[36]	U.S.A.	Par. Trough	Rankine; 225–393 °C	Molten Salt	Direct 2-tank	None	120–150	2009
Wag-d-P	Wagner	2014	[36]	U.S.A.	Par. Trough	Rankine; 225–393 °C	unspecified	None	Natural Gas^{B}	185–220	2009
Wag-e-P	Wagner	2014	[36]	U.S.A.	Par. Trough	Rankine; 225–393 °C	unspecified	None	Natural Gas^{B}	155–190	2009
Wag-f-P	Wagner	2014	[36]	U.S.A.	Par. Trough	Rankine; 225–393 °C	unspecified	None	Natural Gas^{B}	120–150	2009
Zha-P-U	Zhang	2010	[35]	U.S.A.	Par. Trough	unspecified	unspecified	unspecified	Natural Gas^{B}	40–43	2008
Zhan-a-P-SO	Zhang	2013	[7]	Worldwide	Par. Trough	Rankine; 20–400 °C	Synthetic Oil	None	None	170–200	2012
Bee-c-T-MS	Beerbaum	2000	[38]	India	Power Tower	Rankine	Molten Salt	None	None	99–146	2000
Chi-*b*-T-U	Chien	2011	[1]	China	Power Tower	Rankine; 400–600 °C	unspecified	unspecified	None	60–400	2005–2020
Jan-*b*-T-U	Janjai	2011	[5]	Thailand	Power Tower	Rankine; 680 °C	unspecified	Air & Rock-bed	None	350	2003
Jor-T-MS	Jorgenson	2013	[42]	U.S.A.	Power Tower	unspecified	Molten Salt	unspecified	None	120–230	2012
Kay-*b*-T-U	Kaygusuz	2011	[2]	Turkey	Power Tower	Rankine	unspecified	None	None	33–54	2010
Kol-T-MS	Kolb	2011	[43]	U.S.A.	Power Tower	Rankine; 565 °C	Molten Salt	Direct 2-tank	None	78–150	2013–2020
Lil-c-T-U	Lilliestam	2012	[40]	Spain	Power Tower	unspecified; 250–300 °C	unspecified	unspecified	Natural Gas^{B}	300	2007
Nit-a-T	Nithyanandam	2014	[44]	U.S.A.	Power Tower	Brayton (CO_2); > 650 °C	KCl-$MgCl_2$	EPCM-TES	None	53.7	2020
Nit-*b*-T-MS	Nithyanandam	2014	[44]	U.S.A.	Power Tower	Rankine; > 650 °C	Molten Salt	EPCM-TES	None	90.5	2020
Nit-c-T	Nithyanandam	2014	[44]	U.S.A.	Power Tower	Brayton (CO_2); > 650 °C	KCl-$MgCl_2$	HP-TES	None	57.7	2020
Nit-d-T-MS	Nithyanandam	2014	[44]	U.S.A.	Power Tower	Rankine; > 650 °C	Molten Salt	HP-TES	None	96.9	2020
Pur-*b*-T-S	Purohit	2010	[3]	Spain	Power Tower	Rankine; 500–1500 °C	Water/Steam	unspecified	None	130–410	2010
Spe-T-U	Spelling	2012	[37]	U.S.A.	Power Tower	Combined(Air)	unspecified	Air & Packed-bed	None	124–234	2010
Tur-c-T-MS	Turchi	2010	[34]	U.S.A.	Power Tower	Rankine; 565–650 °C	Molten Salt	Stratified Tank	None	94–137	2015–2025
Wan-T-U	Wang	2010	[45]	China	Power Tower	Combined; 600–1300 °C	unspecified	unspecified	None	40–60	2025
Zhan-*b*-T-S	Zhang	2013	[7]	Worldwide	Power Tower	Rankine; 300–565 °C	Steam	None	None	180–240	2012
Zhan-c-T-MS	Zhang	2013	[7]	Worldwide	Power Tower	Rankine; 300–565 °C	Molten Salt	Direct 2-tank	Natural Gas^{B}	150–180	2012
Bee-*b*-H	Beerbaum	2000	[38]	India	Par. Trough	Rankine	unspecified	None	Fossil Fuel^{H}	86–111	2000
Bee-d-H	Beerbaum	2000	[38]	India	Power Tower	Rankine	unspecified	None	Fossil Fuel^{H}	95–130	2000
Kos-H-S	Kosugi	2003	[46]	U.S.A.	Par. Trough	Combined (CO_2); 600 °C	Steam	unspecified	Methane^{H}	44.2–85.2	2002
She-a-H-MS	Sheu	2012	[12]	U.S.A.	Power Tower	Combined (CO_2)	Molten salt	unspecified	Fossil Fuel^{H}	48	1996
She-*b*-H-MS	Sheu	2012	[12]	U.S.A.	Power Tower	Brayton (CO_2)	Molten salt	unspecified	Fossil Fuel^{H}	210–220	2006

(continued on next page)

Table 2 *(continued)*

Key	First Author	Year	Ref	Location	Collector Technology	Cycle Details	Heat Transfer Fluid	Storage Technology	Alternate Heat Source	LCOE ($/MWh)	Time Frame
She-c-H-MS	Sheu	2012	[12]	U.S.A.	Power Tower	Brayton (CO_2)	Molten salt	unspecified	Fossil Fuel^H	109.73–111.50	2006
Tri-H-U	Trieb	2011	[2]	Middle East	unspecified	unspecified	unspecified	None	Fossil Fuel^H	80–280	2010–2050
Bee-e-D	Beerbaum	2000	[38]	India	Dish	Stirling	unspecified	None	None	113–158	2000
Chi-c-D-U	Chien	2011	[1]	China	Dish	Stirling; 600–1500 °C	unspecified	unspecified	None	60–150	2005–2020
Kay-c-D	Kaygusuz	2011	[2]	Turkey	Dish	Stirling	unspecified	None	None	40–60	2010
Hos-O	Hosseini	2005	[47]	Iran	Generic	Combined; 400–500 °C	unspecified	None	None	20.35–41.16	2004
Tim-O	Timilsina	2012	[48]	U.S.A.	Generic	unspecified	unspecified	None	None	194–336	2008
Wil-O	Williges	2010	[49]	Europe	Generic	Combined	unspecified	None	None	150–250	2005

(which influences flexibility). As such, this analysis is typically posed as an optimization problem: maximize revenues (or net profit) by manipulating the electricity production schedule subject to time-varying market specifications and physical constraints (which determine available flexibility). The assumptions and mathematical models used for this analysis are very diverse. Broadly speaking, revenue focused studies consider long time horizons (months to years), optimize on/off decisions, and use simplified (linear) physical models, whereas control-focused studies consider shorter horizons (hours to days), assume fixed on/off schedules, and use detailed (nonlinear) physical models. The impacts of these different assumptions on techno-economic analyses are largely unstudied.

1.3. Objectives and structure

This paper reviews economic studies of CSP systems from the perspective of investors and operators. It establishes trends in LCOE literature, compares LCOE and generalized economic assessment methods, explores similarities between revenue estimation and optimal control frameworks, and presents research directions to improve CSP techno-economic evaluations. This paper does not consider financial benefits of CSP deployment and technology decisions from the perspective of grid operators, such as in [18–21]. Nor does this paper emphasize environmental concerns (e.g., resource consumption, greenhouse gas emissions, water emissions, waste and solid pollutants, etc.), which have been quantified using life cycle analysis in [22–26].

The remainder of this paper is organized as follows. In Section 2, LCOE estimates from 27 literature sources are reviewed and compared. Motivated by recent critiques of LCOE, more general economic assessments are reviewed in Section 3. Section 4 compares operation-focused and revenue estimation studies. Finally, key findings are summarized in Section 5, new research opportunities are presented in Section 6, and concluding remarks are given in Section 7.

2. Levelized cost of electricity estimates

LCOE is an economic metric commonly used to compare a wide range of electricity generation technologies. Such comparisons are often used to inform investment in research and technology development and to design appropriate policies (e.g., government incentives). LCOE is calculated as the ratio of the sum of the cost over the expected lifetime to the sum of the electrical energy production over the expected lifetime [27], as shown in (1). Both future cash and energy flows are discounted at rate r. Sheu et al. [12] present LCOE extensions for hybrid fossil fuel-solar thermal systems.

$$LCOE = \frac{\sum_{t=1}^{n} \frac{(I_t + M_t + F_t - H_t)}{(1+r)^t}}{\sum_{t=1}^{n} \frac{E_t}{(1+r)^t}} \tag{1}$$

where,

I_t: Investment expenditures in the year t
M_t: Operations and maintenance expenditures in the year t
F_t: Fuel expenditures in the year t
H_t: Avoided heat production costs in the year t
E_t: Electricity generation in the year t
r: Discount rate
t: Year
n: Assumed lifetime of system (integer, in years)

LCOE is commonly computed from CSP simulations obtained with software packages such as the System Advisor Model (SAM) [28,29] and TRaNsient SYstem Simulation (TRNSYS) [30]. The former simulation tool focuses on the performance of energy systems in a power grid and includes detailed cost correlations for financial calculations, while the latter focuses on capturing system dynamic transients. In the

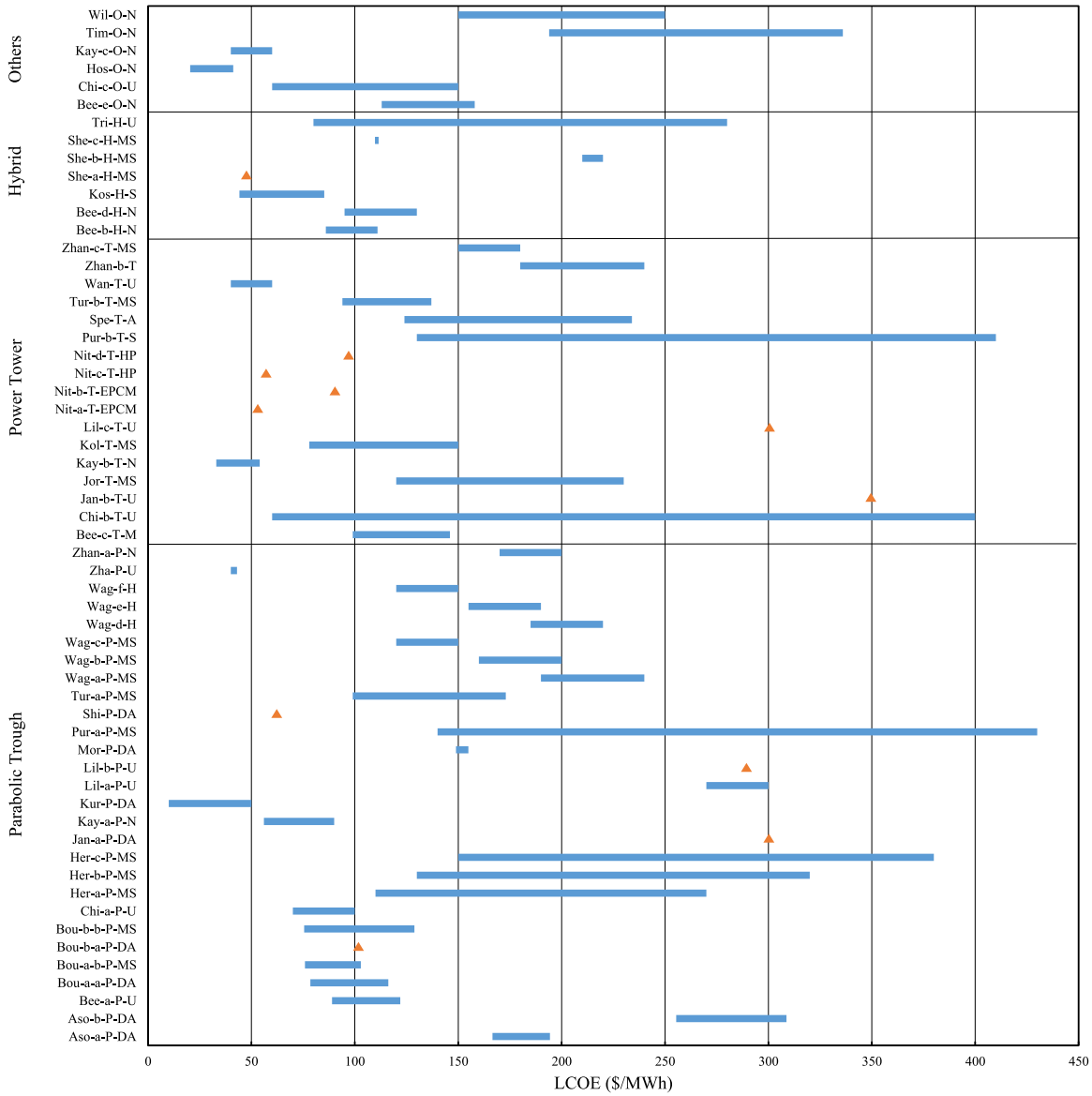

Fig. 2. LCOE estimates by technology type. Key: P=Parabolic Trough, T=Power Tower, H=Hybrid System, B=Backup System, D=Dish, O=Other CSP System, MS=Molten Salt, SO=Synthetic Oil, S=Steam, U=Unspecified TES. EPCM=Encapsulated Phase Change Material TES, HP=Latent TES with Embedded Heat Pipes. Triangles indicate single values for LCOE reported in the study, whereas bars represent ranges.

reviewed LCOE literature, SAM was used in six studies [31–36] and TRNSYS was used in four studies [5,7,12,37].

Table 2 summarizes the estimated LCOE for several different CSP technologies at different geographic locations and times. Among the 27 studies reviewed, parabolic trough and power tower were the most commonly considered collector types (reported in 17 and 13 studies, respectively). Molten salt and synthetic oil heat transfer fluids were considered in 12 and 7 studies, respectively. The combination of parabolic trough collectors with molten salt thermal energy storage was the most common configuration (considered in 6 studies). The ranges of LCOE values are shown in Fig. 2, organized by technology type. Trends in LCOE estimates for different CSP technologies are discussed in the remainder of this section.

2.1. Technology comparisons

Comparisons of LCOE estimates across multiple studies are difficult, given the high variability in assumed parameters and data, which include: geographic location/solar irradiance, capital cost estimates/forecasts, storage size and efficiency, lifetime/analysis horizon, government incentives, and base year for monetary estimates. Six studies compare LCOE estimates for multiple CSP technologies with consistent assumptions across technology types. These results are summarized graphically in Fig. 3, grouped by year into nine sets of LCOE estimates. Initial analysis suggests that the LCOE of power tower collectors is slightly lower than parabolic trough systems in the surveyed literature, although there are outliers to this trend. In four of the estimate sets, the LCOE ranges of parabolic trough and power tower systems overlapped [1,7,38]. For two of these sets, the minimum LCOEs of power tower systems were lower than those for parabolic trough systems [1,7]. Power tower systems are less expensive than parabolic trough systems in four estimate sets [1,2,34]. In contrast, Janjai et al. [5] determined power tower systems are more expensive.

Boukelia et al. [32] offers the only direct comparison of working fluids. The authors compared eight different 50 MW parabolic trough CSP system configurations located in Algeria and estimated LCOE of $78.5/MWh to $116.2/MWh (synthetic oil) and $75.9/MWh to $102.9/MWh (molten salt). For CSP systems with an optional fuel-backup system and TES, the authors determined molten salt working fluid (operating temperatures of 286–550 °C) resulted in a 16.4% lower

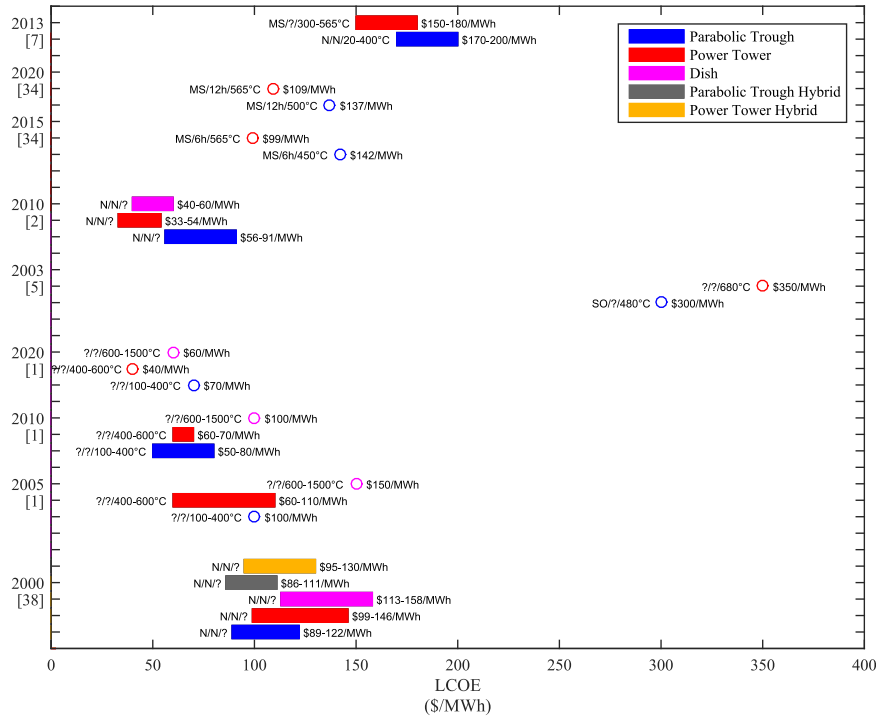

Fig. 3. Comparisons of LCOE, organized by technology type and time frame (see vertical axis). The text to the left of each symbol encodes technical specifications: storage technology (SO=synthetic oil, MS=molten salt, N=no storage, ? =not specified) / storage size (number=size in hours, N=no storage, ? =not specified) / thermodynamic cycle operating temperature (number=temperature in °C, ? =not specified). The LCOE estimate is given to the right of each symbol.

LCOE relative to a similar system using a synthetic oil working fluid (operating temperatures of 296–393 °C).

2.2. LCOE predictions and trends

No CSP technology combination is unanimously expected to be LCOE superior by 2020. This is due, in part, to inconsistent cost assumptions (see Table 3). For example, Chien and Lior [1] estimated power tower systems ($40/MWh) will be significantly cheaper than parabolic trough systems ($70/MWh) by 2020. This dramatic difference assumes that surface, operation, and maintenance (O & M) costs will remain/become lower for power tower systems by 2020. Overall, the authors predicted only a moderate 30% reduction in LCOE for parabolic trough CSP systems and less certain 33–64% reduction for power tower systems. In contrast, Turchi et al. [34] predicted parabolic trough systems will be LCOE superior in 2020 due to cheaper installed cost and O & M costs. The authors expect low melting-point molten salts will be successfully deployed for 100 MW parabolic trough systems by 2015–2020, but will not be feasible for 100 MW power tower systems until 2025. Consequently, Turchi et al. predicted that as storage capacity increases, installed cost will also increase for power tower systems build during 2015–2020. Kolb et al. [43] analyzed LCOE reductions from 16 CSP technological improvements for power tower/molten salt systems, which include: heliostat drive improvements, heliostat structure optimization, heliostat manufacturing improvements, anti-soiling/cleanliness of mirrors, optical efficiency improvements, receiver materials testing & database, selective absorbers, flux measurements, high temperature hardware, high temperature storage, single tank thermocline, parasitic load reductions, and O & M cost reductions, high temperature receivers (600–700 °C), supercritical steam cycles, supercritical CO_2 Brayton cycles. The authors found the latter three improvements were the most significant and led to LCOE

Table 3
Survey of CSP cost reduction estimates, organized by collector technology. Intra-study comparisons are separated by dashed lines, different studies are separated by solid lines.

Study	Timeframe	CSP Technology Considered	Cost Reduction Assumptions/Estimates			LCOE Reductions
			Capital cost	*O & M cost*	*Surface cost*	
[1]	2005 to 2020	parabolic trough w/ unspecified TES	46.1%-61.1% (2.6-3.6 to 1.4 $/W)	60% (87.6 to 35.0 $/kW-yr)	56.3% (630 to 275 $/m^2)	30% (100 to 70 $/MWh)
			Capital cost	*O & M cost*	*Surface cost*	
[1]	2005 to 2020	power tower w/ unspecified TES	10.7%-73.2% (2.8-4.1 to 1.1-2.5 $/W)	70%-75% (87.6-105 to 78.8 $/kW-yr)	57.9% (475 to 200 $/m^2)	33.3%-63.6% (60-110 to 40 $/MWh)
			Capital cost	*O & M cost*	*Surface cost*	
[1]	2005 to 2020	dish w/ unspecified TES	76% (5.0 to 1.2 $/W)	77.5% (350 to 78.8 $/kW-yr)	89.3% (3000 to 320 $/m^2)	60% (150 to 60 $/MWh)
			Installed cost	*O & M cost*	*Capacity factor*	
[34]	2015 to 2020	parabolic trough with molten salt TES (6 hr storage in 2015, 12 hr in 2020)	1.5% (6.6 to 6.5 $/Wh)	25% (60 to 45 $/kW-yr)	increase 39.5% (43% to 60%)	30.3% (142 to 99 $/MWh)
			Installed cost	*O & M cost*	*Capacity factor*	
[34]	2015 to 2020	power tower w/ molten salt TES (6 hr storage in 2015, 12 hr in 2020)	increase 15.9% (6.3 to 7.3 $/Wh)	23.1% (65 to 50 $/kW-yr)	increase 39.5% (43% to 60%)	20.4% (137 to 109 $/MWh)

Table 4
Value of thermal storage and alternate heat sources.

Study	Technology	Key Findings
[51]	Parabolic trough CSP with supplemental heat source and optional two-tank molten salt TES	Addition of storage increased **solar share** by up to 47% and decreased **supplemental fuel usage** by 43%
[42]	Dry-cooled power tower CSP	Addition of 9 h of TES increased **annual capacity factor** from 26.5% (no storage) to 52.7%
[52]	CSP with optional TES and wind coordination	Dramatic increase in **profits** from 34,014 € (no storage) to 75,084 € with addition of TES (for nearly same amount of energy sold)
[32]	Parabolic trough CSP with optional fossil fuel backup and optional two-tank TES	Addition of TES and fossil fuel backup system resulted in highest overall **energy efficiency** (increased from 18.28–18.48%), overall **exergy efficiency** (increased from 20.01–21.77%), and **capacity factor** (increased from 26.40–38.20%)
[39]	Parabolic trough CSP with molten salt TES	CSP **capital cost** increased from $4.2/W (no storage) to $8.6/W (7.5 h storage), **LCOE** increased from $270/MWh (no storage) to $295/MWh (7.5 h storage)
[36]	Parabolic trough CSP with optional two-tank molten salt TES and optional natural gas backup system	Addition of 12 h thermal storage increased **LCOE** from $190/MWh to $240/MWh, increased **annual capacity factor** from around 30–55%
[34]	Power tower with stratified tank molten salt TES	Increasing storage from 6 h to 12 h raised **capacity factor** from 43–65%

decreases of $20/MWh per improvement (relative to a modern subcritical Rankine cycle). Overall, the considered technological factors are expected to decrease LCOE by 48% (from $150/MWh to $78/MWh) for power tower/molten salt systems from 2013 to 2020 with a 10% investment tax credit.

A few studies estimate CSP cost reductions as a function of installed capacity. Hernández-Moro and Martínez-Duart [39] used a learning rate model to estimate future cost reductions from 2010 to 2050. The authors assumed CSP system costs will decrease 11% every time the installed capacity doubles. The authors estimated 37.5% LCOE reductions for 2010–2020 (from $320/MWh to $200/MWh), and then anticipated the learning will slow during 2020–2050 yielding only a 35% LCOE reduction ($200/MWh to $130/MWh). Similarly, Trieb et al. [50] assumed a progress ratio of 0.88, indicating 12% reduction in LCOE will occur each time the global installed capacity doubles. This produces more drastic LCOE predictions during 2010–2020 (48.9% reduction from $280/MWh to $143/MWh) than 2020–2050 (44.1% LCOE reduction from $143/MWh to $80/MWh).

2.3. Value of thermal storage

Thermal energy storage is expected to greatly improve the performance of CSP systems by increasing overall energy efficiency and annual capacity factor, as well as decreasing O & M costs [32,34–36,39,44]. Table 4 compares the anticipated benefits for storage. Hernandez-Moro et al. [39] estimated capital cost increases from $4.2/W (no storage) to $8.6/W (7.5 h storage), which resulted in LCOE increasing from $270/MWh to $295/MWh. Similarly, Wagner and Rubin [36] found that the integration of a 12 h direct two-tank molten salt TES system increased LCOE from $190/MWh to $240/MWh. Out of the six studies reviewed that compared CSP configurations with and without TES, five found that the addition of TES increased LCOE. *In contrast, studies that considered the time-varying price of electricity from energy markets concluded that, even if storage increased capital costs, it also increased revenue*. In several cases, the revenue increases greatly outweighed the cost increases and resulted in shorter pay-back periods. This, again, indicates inconsistencies that can be observed with LCOE as storage flexibility is not taken into account under this metric.

2.4. Sunshot goals and LCOE optimization

The U.S. Department of Energy (DOE) initiated the SunShot goal to reduce the LCOE for solar energy technologies to $60/MWh by 2020 with no incentives [53]. Using SAM and stochastic analysis, Ho et al. [54] estimated a 50% likelihood of achieving an LCOE of $100/MWh, a 25% likelihood of reaching $90/MWh, and a near zero likelihood of achieving the SunShot goal with current technology options. The authors estimate a 15% (scenario 1) or 46% (scenario 2) of achieving the SunShot goal if the minimum heliostat cost was reduced from $75/m^2 to $38/m^2 (scenario 1) or to $19/m^2 (scenario 2), and the maximum solar field heliostat image error was reduced from 0.003 to 0.002 rad (scenario 1) or to 0.0015 rad (scenario 2). Nithyanandam and Pitchumani [44] also predicted an exergetic efficiency greater than 95% and storage cost less than $87.95 million are required for a 20 MW power tower CSP system to reach the SunShot goal.

Parametric analysis with SAM was the most commonly used approach to reduce the LCOE of CSP systems [29,33,35,36]. For example, Boukelia et al. [33] adjusted the solar multiple (from 1 to 2.4) and TES capacity (from 0 to 10 h), resulting in LCOE reduction from $128/MWh to $86/MWh (32.8%) for a molten salt parabolic trough. Similarly, Wagner and Rubin [36] found changing the solar field area from 0.58 km^2 to 1.05 km^2 and adding 12 h of TES resulted in LCOE reduction of 25%. Likewise, Zhang et al. [35] manipulated solar multiple and TES capacity, ultimately obtaining a 7% reduction in LCOE with 10.5 h storage. Engineering insights and iterative design revisions have also used to improve CSP systems and reduce LCOE [7,13].

Other researchers used optimization algorithms to automate LCOE minimization. For example, Morin [6] used a genetic algorithm [55] to minimize the LCOE of a 50 MW parabolic trough CSP system with molten salt TES. Morin manipulated the solar field area, distance between collector loops, storage size, operating temperature and pressure, resulting in a LCOE reduction from $157.1/MWh to $147.7/MWh (6.0%). Spelling et al. [37] used a similar optimization approach to consider two design objectives, investment cost and LCOE, for a combined-cycle solar power tower. Sheu et al. [12] used HFLCAL [56] to optimize the solar field layout, and found LCOE reduction of 1–5%.

Despite these improvements from optimization and forecasted cost reductions, CSP technologies may remain unattractive from a LCOE-perspective relative to other renewable technologies (e.g., wind, photovoltaic). A key advantage of CSP technologies, however, is the relative ease of energy storage and dispatchability, which is missing from LCOE. It is thus critical to analyze CSP systems with alternate economic metrics, as discussed next.

3. General economic assessments

In many countries and regions (e.g., North America, Europe, Australia, New Zealand, India), electricity is completely or partially acquired through competitive markets [57]. Modern electricity markets offer revenue opportunities for flexible energy systems by buying and selling energy or by providing ancillary services (e.g., frequency regulation, spinning reserves and non-spinning reserves in the US) or both. Moreover, prices in these markets strongly fluctuate over time and thus offer additional incentives for energy storage. Fig. 4 shows the average hourly (day-ahead market) energy price for Daggett, California and solar irradiance for Las Vegas, Nevada for 2015. Note that, during

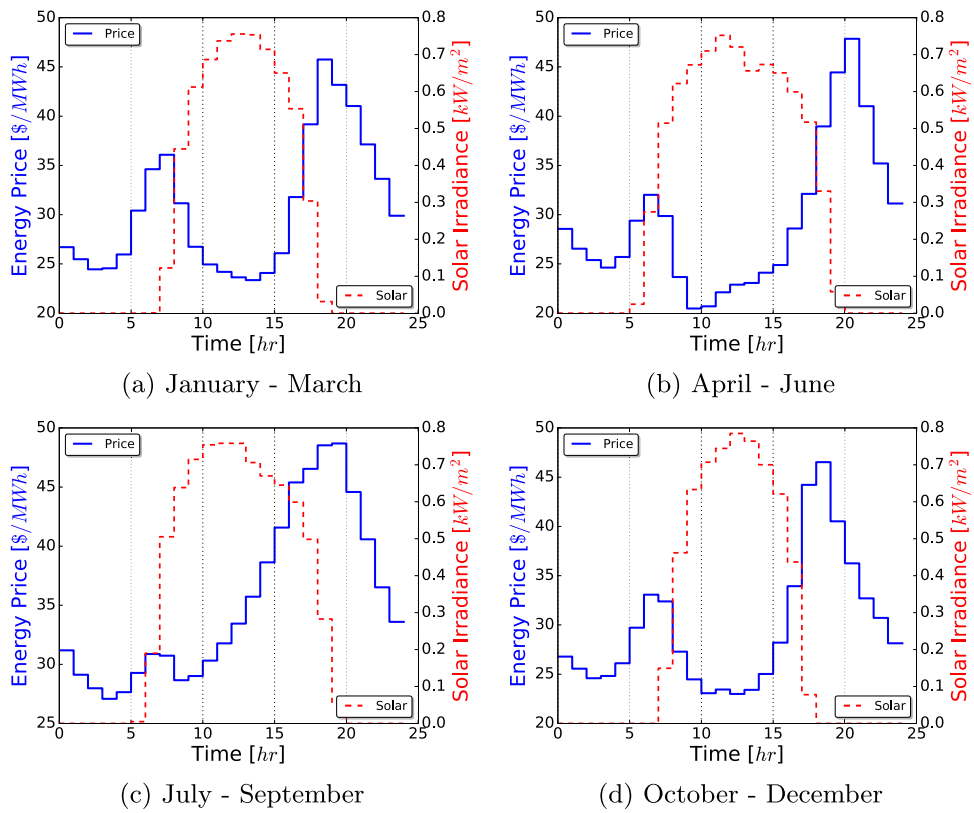

Fig. 4. Comparison of average day-ahead electricity prices (energy) and solar irradiance for 2015. Notice that price and solar irradiance are out of phase. Market and solar data are from CAISO (http://oasis.caiso.com/) and UNLV [58], respectively.

non-summer months, electricity prices and solar irradiance are out of phase. The lowest average electricity prices (20–25 $/MWh) occurred during the early morning (1–5 a.m.) and around solar noon, whereas the highest average prices (45–50 $/MWh) occurred in the late evening (6–9 p.m.). Thus, by utilizing TES and having the ability to shift electricity generation, a CSP system may *approximately double* its revenue. Ancillary services provide frequency and voltage support to help stabilize power grids, and thus are inherently valuable, even without competitive markets.

Several researchers have developed frameworks to optimize operating policies and estimate revenues for a variety of energy systems (e.g., CSP systems with thermal storage, batteries, flywheels, photovoltaic systems with electricity energy storage) while considering technology specific efficiencies and physical limitations. These frameworks are reviewed in the remainder of this section, with an emphasis on CSP systems.

3.1. Electricity markets and multiple time scales

Electricity markets are run in a hierarchical manner to capture multiple time scales. In the **day-ahead market**, sufficient energy and ancillary services are procured for each hour of the next day based on the forecasted demand minus non-dispatchable variable renewable generation. Participation in day-ahead markets requires energy system operators to commit to providing energy and/or ancillary services in the morning the day before. In the **real-time market**, energy and ancillary services are procured in shorter time intervals (e.g., five, fifteen minutes) anywhere from five minutes to a few hours in advance. This structure is especially prevalent in the U.S. Historical market data for energy and ancillary services from California are presented in Figs. 5 and 6 to illustrate each market level. As can be seen, prices are more volatile in the real-time market and sometimes they become negative. This creates financial incentives for fast and dispatchable energy systems that may quickly respond to price fluctuations (prices commonly double or triple in the real-time market). Moreover, energy prices are lower in the early morning and higher in the late afternoon and evening. Storage systems may thus be used to collect energy at low prices and (re)sell it later, which is known as energy arbitrage or time-shifting.

Ancillary services help stabilize the electricity grid at high frequencies and offer contingency for when scheduled generation is misaligned with net demand. Four ancillary services are procured through markets in California: regulation up, regulation down, spinning reserves, and non-spinning reserves.[1] When an energy system is providing regulation up and/or down, the Automatic Generator Control (AGC) layer may adjust its power output set point within the awarded capacity every 4 s. Such energy systems are compensated for both the provided regulation capacity and mileage (amount their power output setpoint changes). Spinning reserves are synchronized to the grid but do not generate electricity. Within ten minutes of being called upon, the reserve must deliver the full power output for 30 min (real-time) to one hour (day-ahead), depending on which market the reserve was procured in. Non-spinning reserves have similar requirements, except the resources are not synchronized to the grid. Reserves are rarely dispatched, and resources are paid for the reserve capacity even when not dispatched. *The increasing adoption of intermittent renewable energy sources (e.g., wind, photovoltaics) is expected to grow the demand for ancillary services*. For instance, regulation capacity requirements are anticipated to increase by 10–15% if wind penetration increases from 5000 MW to 15,000 MW in Texas [60]. Similarly, CAISO anticipates doubling to quadrupling regulation capacity requirements relative to current levels for 33% renewable power generation

[1] The frequency regulation and reserve systems in Europe are structured differently, with primary, secondary, and tertiary reserves [59].

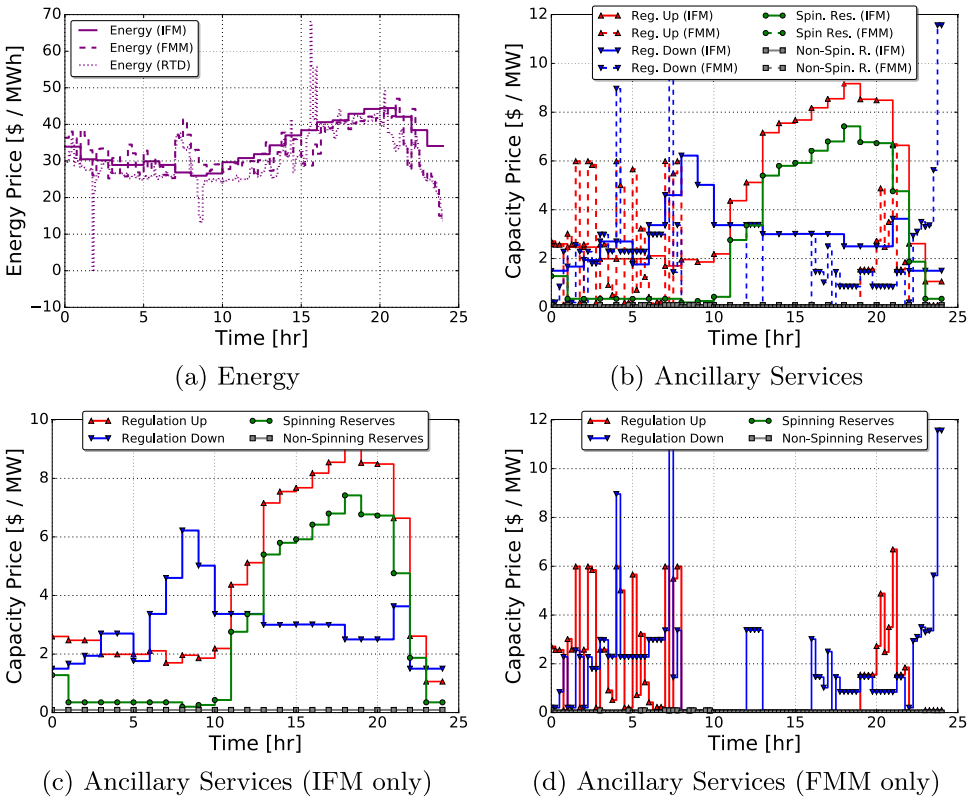

Fig. 5. Comparison for energy and ancillary prices from node in CAISO near Daggett, CA for Sunday, August 2nd, 2015, for all three market layers: Integrated Forward Market (IFM), Fifteen Minute Market (FMM) and Real Time Dispatch (RTD). The IFM is part of the day-ahead market, and schedules in 1-h intervals. The FMM and RTD are both real-time market processes, and schedule in 15 and 5-min intervals, respectively.

scenarios [61]. Finally, the retirement of coal-fired generators is anticipated to reduce the supply of ancillary services [61], creating additional opportunities for flexible and dispatchable generation systems such as CSP.

Several markets throughout the world also include *government subsidies* to promote installation and operation of CSP capacity. In Spain, for instance, operators of 50 MW_e or smaller CSP systems are allowed to select once a year between a fixed price or a market-based subsidy structure [62,63]. Under the former scheme, CSP operators receive a fixed price for electricity, regardless of the time of day. In the latter scheme, CSP operators receive the market price for electricity plus a fixed € per kWh incentive subject to a price floor and ceiling. Additional € per kWh subsidies are available for CSP operators using biomass as supplemental heat sources [63]. The economic opportunities of these pricing schemes were analyzed in detail in [15,62–64]. All of these studies concluded that the *market-based incentive structure offers greater revenue potential* (up to 10% [62]) for carefully operated CSP systems because it captures time-varying effects.

3.2. Economic assessments using historical data and futuristic scenarios

Scheduling-based assessment frameworks have been used to estimate revenue potentials for other renewable energy storage technologies, including batteries [65–70], flywheels [67], underground

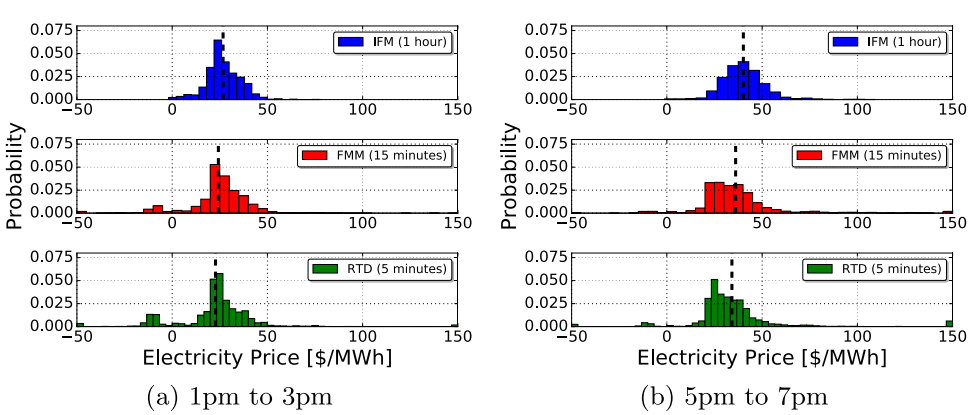

Fig. 6. Histogram of electricity prices for all of 2015 for node near Daggett, CA. Probabilities were calculated using a time-weighted average. The dashed lines mark the mean prices for the entire year for each market (IFM, FMM, RTD). These figures illustrate a few common trends: larger price variations in the fast markets, and higher average prices in the day ahead (hourly) market and during the evening.

pumped-hydro [66] and generic electrical energy storage [71], selling energy and/or ancillary services in competitive electricity markets. In general, these methodologies share three key components: (1) a mathematical model for the energy storage system, (2) a mathematical model for electricity markets (typically based on historical data) and (3) an algorithm or operational policy to dictate how the energy storage system operates (buys and sells) in the markets. In several studies, these three components are combined into a numerical optimization problem to calculate the theoretical maximum amount of revenue available for a specific storage technology participating in a specific market [67,69–71].

Three groups of researchers have used historical market data to assess the economics of CSP technologies with TES. Madaeni, Sioshansi, and Denholm [17] analyzed parabolic trough CSP systems in two specific locations in the American West. The authors determined that providing spinning reserves (an ancillary service) may increase average annual revenues by up to 17%, compared to performing only energy arbitrage. The economic benefits of storage further improved when the capacity value was also considered. The authors also calculated the breakeven capital cost for CSP systems in these two regions ranging from $2500 to $5000 per kW, as a function of solar field and storage sized relative to the power block (110 MW). The authors concluded that no CSP systems were economically feasible using 2010 capital costs (from [34]) in conjunction with historical weather and market data. The authors determined, however, that a significant spectrum of CSP sizes are economically feasible using 2020 forecasted capital costs from [34]. Interestingly, all of the economically feasible designs included at *least one hour of thermal energy storage*, emphasizing the critical role that storage and dynamic operations play in the economics of CSP systems.

More recently, González et al. [63] compared parabolic trough CSP systems with optional natural gas and biomass-fired backup boilers participating in the Spanish energy spot market. Their model of the CSP process includes four distinct operating modes (generation, off, start-up, and antifreeze) and several operating constraints imposed by process start-up. Using historical electricity price data from 2013, the authors increased profits 10.18% (gas fired backup) and 12.86% (biomass-fired backup) by optimizing the energy generation schedule. The system without a backup heat source provided 107 GWh_e per year resulting in profits of 7.8 million € per year (73.5 €/MWh_e average). Optimized operation with gas-fired backup produced 120 GWh_e and 8.6 million € per year (71.8 €/MWh_e average) and optimized operation with biomass-fired backup produced 130 GWh_e and 8.9 million € (67.9 €/MWh_e average). This study illustrates that economic performance of CSP systems with storage is not only driven by design but also by operating policy and, as such, both tasks need to be integrated. Again, such integrated effects are not captured in LCOE.

Usaola [62] compared operating strategies for a 100 MW CSP system with 6 h of molten salt storage under three different subsidy structures in Spain. Using 2010 prices, the author found that operating under the fixed tariff payment structure resulted in 9.14% less revenue (97 versus 107 million €) compared to non-optimal participation in the spot market (baseline case). With optimization, revenues were improved by 1.42% and 1.33%, using one and two-day planning horizons, respectively. Most of the performance improvements occurred during winter when less solar energy was available and the operational policy was more constrained. The small increase in revenue was a consequence of the market structure: CSP systems receive the market price plus a fixed subsidy, subject to the price floor and ceiling. Without this subsidy, optimized operating policies would achieve 6.42% and 6.44% higher revenues (one and two-day planning horizons, respectively) compared to the non-optimized reference policy. With the subsidy, the CSP systems produced 328 to 337 GWh_e resulting in revenues of 97–109 million € per year. Without the subsidy, the CSP system would only realize revenues of 13–14 million € per year. Usaola thus concluded (similar to Kost et al. [15]) that the analyzed subsidy structure in Spain *does not properly incentivize full utilization of the thermal storage* capacity, but does dramatically benefit CSP operators. This study illustrates that *guiding policy making* (*design of incentive schemes*) *without properly capturing dynamic behavior in CSP systems* (*i.e., by using LCOE*) *is dangerous and can lead to reduced opportunities for these systems*.

4. Optimal control and operation policies

The revenues potential of a CSP system in an energy market depends on its operating policy (e.g., when to sell electricity and in which market) and on the state of the system (e.g., storage level at a given time). In Section 3, CSP system operating policies are approximated using coarse time discretizations (e.g., 1 h) and simplified (often linear) steady-state models replicated over time. In contrast, optimal control-focused frameworks consider the (nonlinear) dynamics of CSP systems and can predict the minute-by-minute performance. This fidelity is necessary to properly capture dynamic flexibility and constraints. In addition, optimal control studies use *weather and price forecasts* in a rolling horizon framework to capture the actual nature of operations. The overall goal is to maximize revenue (or a similar objective function) over a one day or longer horizon, by exploiting several trade-offs in the CSP system. Most notably, these optimal control frameworks seek to sell energy (and/or ancillary services) when the price is the highest, subject to the availability of solar energy and capacity of the thermal storage. This section reviews control focused studies and emphasizes their similarities with the revenue estimation methods reviewed in Section 3.

Powell and co-workers explored control and optimal operating strategies for parabolic trough CSP systems with both a supplemental heat source and two-tank thermal storage with eight hours of capacity [51,72,73]. First, the authors studied base load generation and found the addition of TES was most pronounced for clear days, increasing the solar energy share from 47.6–70.1%. In comparison, solar energy share only increased from 34.3–35.4% for cloudy days. In a follow-up study [73], Powell et al. minimized the combination of supplemental fuel usage and pumping work, resulting in significant system performance improvements: for intermittently cloudy days, the amount of solar energy collected increased from 4.85 MW_t to 7.25 MW_t and the solar collection efficiency increased from 44.0–65.7% with standard [51] versus optimized operational policies, respectively. Less impressive improvements were realized during sunny days: the total solar energy collected increased from 15.4 MW_t to 16.79 MW_t and the solar collection efficiency increased from 65.6–71.5%. For cloudy days especially, the improvements were mainly due to hybrid mode operation for which the parabolic troughs operated at a lower temperature to reduce radiative losses in the collectors and the supplemental burners simultaneously provided heat to reach standard boiler operating temperatures. Camacho et al. [74] investigated similar operational trade-offs and found that as the temperature of the heat transfer fluid increased, the steam cycle efficiency and heat losses in parabolic troughs also increased. Similarly, at higher temperatures, the heat transfer fluid was less viscous and pumping work decreased. By optimizing the heat transfer fluid temperature throughout the day, the authors anticipated a 4% increase in solar energy production for the Plataforma Solar de Almería facility in southern Spain (parabolic trough, stratified tank thermal storage). Unfortunately, solar energy production was used as the primary performance metric in these two bodies of work, and time-varying electricity prices and economic metrics were not considered.

In contrast, Lizarraga-Garcia et al. [14] studied revenue maximizing operational strategies for an integrated volumetric solar heater and thermal energy storage system [75] with electric heaters in the storage tanks. These heaters enable electricity buy-back and are intended for markets where the real-time electricity price is volatile and commonly goes negative, such as Germany and West Texas. The latter market experienced negative prices during 23% of April 2009 [76]. For the

studied system (35 MW_e nominal net output capacity, 15 h of molten salt thermal storage), the authors found the addition of 20 MW of electric heaters increased the capital investment by 10% ($982,000), but resulted in a revenue increase of $6600 to $7850 per day compared against optimal operation without electric heaters. The authors estimate a half-year pay-off for the addition of electric heaters, but also note this design modification increased the LCOE of the system.

In general, these control focused studies consider detailed mathematical models (e.g., systems of partial/ordinary algebraic differential equations) of CSP and TES systems, which are used to identify performance enhancements (e.g., pumping and heat loss trade-offs) and assess economic opportunities (e.g., electricity buy-back) at faster time scales. In contrast, the studies reviewed in Section 3 emphasize market rules, start-up/shutdown constraints, and economic assessment (e.g., revenue estimation and net present value calculation). Understanding the true value of CSP systems with TES requires merging these two types of studies and evaluating opportunities at multiple time scales.

5. Discussion

Two types of metrics are preferred in CSP techno-economic studies: LCOE and market-based revenue (e.g., NPV, ROI, etc.). A majority of studies use LCOE as the primary metric. Although power tower and molten salt technologies are popular in literature, there is no consensus if these technologies provide superior LCOE values. In particular, assumptions used in LCOE analyses differ significantly, making comparisons nearly impossible. In many studies that compared multiple technologies (e.g., parabolic trough against power tower, synthetic oil against molten salt), the range of LCOE estimates overlapped, and the conclusions about future LCOE superiority highly depend on the assumed cost reductions.

The value of TES capacity depends on the selected economic metric (see Table 4). Because LCOE does not capture the economic opportunities arising from the time-varying value of electricity (which are increasing as more non-dispatchable renewable power is absorbed in the power grid), many studies find that storage increases LCOE (decreases value). In contrast, storage capacity increases the flexibility and the available revenues to CSP generators interacting with markets. Thus LCOE analysis undervalues flexibility and energy storage and does not capture novel features of emerging technologies. As demonstrated in [14], LCOE and payback period metrics may give divergent investment decisions for CSP design modifications. Market-based methods are preferred, as they are more inline with investment criteria used by potential investors.

In baseline load operation, flexibility and storage capacity for CSP systems is underutilized and undervalued, as reflected in LCOE analysis. In contrast, adjusting electricity generation to follow time-varying electricity prices offers much higher revenue opportunities. One study found 10% higher revenues are available through energy sales in Spanish market relative fixed tariff alternatives [62]. Another study found ancillary service provisions further boost market revenues by 17% [17]. Additional revenues are also available at faster timescales via real-time markets for CSP systems with sufficient dynamic flexibility [14]. Economic assessments based on market conditions are necessary to properly value the inherent dynamic flexibility of CSP systems, and highlight advantages relative to alternate non-dispatchable renewable technologies, such as photovoltaics. LCOE improvements are expected to be driven by cost reductions, with small probabilities of reaching SunShot performance targets. In contrast, market-based assessment considers new revenue streams, and provide many more degrees of freedom for optimization.

6. Research opportunities

Based on the reviewed literature, four questions regarding techno-economic analysis of CSP systems participating in organized electricity markets remain unanswered:

1. What are the economic opportunities from different market layers (timescales)?
2. What level of model detail is required to capture the flexibility of CSP systems and accurately estimate their revenue potential from markets?
3. How should the design and operation of CSP systems be co-optimized?
4. What is the impact of uncertainty on market revenues and techno-economic analyses for CSP systems?

Dowling et al. [77] recently explored the first question by analyzing parabolic trough CSP systems with TES operating in Southern California. They estimated the maximum available market revenue by optimizing the market participation and CSP operation of these systems using historical coincidental price and meteorological data. A novel optimization strategy was developed to consider both start-up/shutdown restrictions [78] and nonlinear performance correlations for the power block and solar collector field [79]. Their model tracked the mass and energy levels in the storage tanks with 5-min time step, and is a hybrid of those considered in studies from Sections 3 and 4. The analysis ultimately found only 53–62% of the available market revenues are accessible through sole participation in the day-ahead market (hourly intervals). Thus substantial economic opportunities are only available in the real-time market (5 and 15-min intervals), yet most previous studies, such as [17,62,63], only considered slower timescale (hourly intervals).

In the remainder of this section, three research directions are proposed to answer the above-mentioned questions.

6.1. Unified framework for multiscale economic assessments

A unified framework is needed to systematically identify economic opportunities at multiple time scales and accelerate the adoption of market-based assessments. LCOE calculations are simpler and standardized, which contribute to their popularity. In contrast, there are a variety of optimization models used for revenue and net present value assessments of CSP systems. For example, a constant steam cycle efficiency was assumed in several studies [14,51,52,72,73,78,80,81], whereas other studies used simplified correlations [62,74,82] and some extensively modeled the power block [83–85]. Similarly, some researchers used System Advisor Model (SAM) [15,17] or a constant energy conversion factor [52,78,80,81] to tabulate solar collector output, whereas other researchers considered (partial) differential algebraic equation models to capture operational trade-offs in the solar collector system [51,72–74,86]. Some papers considered start-up and shut-down decisions in detail [63], whereas others consider the simultaneous sale of energy and ancillary services [17,52]. All of these models should be compared and a standard library of models should be established. The impact of model simplifications on the quality of economic metric estimates needs to be quantified and balanced against the computational cost, input data requirements, and complexity of higher resolution models. Similarly, a library of region-specific electricity models in conjunction with aggregated weather and price data sets needs to be assembled.

Several numerical challenges associated with the proposed unified framework also need to be addressed. First, start-up and shut-down models require discrete optimization variables and detailed physics-based models use nonlinear equations. Together, this results in non-convex mixed-integer nonlinear optimization problems, which are computationally challenging to solve with existing tools. Simplifications made to overcome this complexity should be carefully justified and assessed to maintain physical fidelity. Furthermore, optimization of the operating policy over a long time-span, such as a month or year, significantly

increases the problem size and exacerbates the other numerical challenges. Yet these long horizons are desirable for CSP system *design* problems. These two issues may be mitigated by decomposition schemes and new parallel optimization algorithms [87–91].

The greatest revenues are available through simultaneous participation in both day-ahead and real-time electricity markets [77]. Although simplified steady-state models may be sufficient for assessing economic potentials from day-ahead markets (which typically operate with 1-h time steps), dynamics will likely be important for real-time markets (which operate on minutes time scales). Ramp rate constrains may not accurately capture important dynamics (e.g., changes in steam cycle efficiency) and detailed models, such as those in [92–95], may be required. Simultaneously considering both time scales creates additional numerical difficulties. This might explain why *none of the reviewed studies except* [77] *consider participation in both types of electricity markets*. Economic evaluations for CSP systems may benefit from new approaches for coupled scheduling and optimal control [96–100].

6.2. Coupled design and operational policy optimization

Design and operation are intimately coupled in CSP systems. Design decisions, such as the sizes of the thermal storage and the solar collectors, impact the operational policy to be used and *vice versa*. Furthermore, the revenue potential of a CSP system depends on the operational policy, available solar radiation, and market conditions. Martín et al. simultaneously optimized the design and operation of a few hybrid CSP systems tailored to conditions in southern Spain [83–85]. The authors designed a wet-cooled power tower CSP systems with molten salt storage that produced between 9.5 MW_e (winter) and 25 MW_e (summer) by maximizing energy production over an entire year. The authors calculated electricity production costs at 0.15 €/kWh_e (260 M€ investment), and estimated the cost would decrease to 0.07 €/kWh_e by scaling up to 400 MW_e capacity [83]. In a follow-up study, the authors compared these results to an optimized air-cooled CSP system: the wet cooled system produced 6 GWh_e more energy in a year (117 GWh_e versus 111 GWh_e) and required 5 M€ less investment (260 versus 265 M€), but also consumed 2.1 L_{water}/kWh_e compared to no water consumption for the air-cooled system. This is because air-cooled systems require more energy to run fans and blowers than the pumps in wet-cooled systems. The authors also estimate CO_2 savings of 7.39×10^4 (wet-cooled) and 7.39×10^4 (air-cooled) t/yr for the two CSP designs. Similarly, Madaeni et al. [17] explored the interplay between design and operation of CSP systems using a two-step approach. The authors generated over 100 solar collector and thermal storage system size combinations and, for each of these candidate designs, they optimized the operating policy to maximize revenue using real market data and estimated the break-even cost. Kost et al. [15] extend this work to consider supplemental heating with natural gas and energy buyback using electric heaters in addition to sizing the solar collector and thermal storage systems. The authors analyzed the impact of different subsidy structures on the optimal designs and operational policies, and found that subsidies were required for CSP investment (i.e., positive net present value). Their approach, similar to Martín et al., uses advanced optimization techniques to simultaneously manipulate the design decisions (e.g., equipment selection and sizes) and operational policies.

The above-reviewed methodologies should be extended and improved in several ways. Most notably, *averaged* or *typical* weather data are almost exclusively used in the analysis of CSP systems. For example, Martín et al. consider a single daily radiation profile for each month to calculate yearly performance metrics [83,84]. Unfortunately, by using only averaged weather data, extreme events are ignored and thus storage capacity is likely underestimated. Furthermore, for markets with significant solar penetration, prices and available solar irradiance are correlated. Using average weather data with daily market prices does not fully capture economic opportunities for CSP systems. Instead, it is preferred to optimize the design and operation of a CSP system over a long horizon (e.g., one year) while considered coincidental historical weather and market data for each day. Long computational times for such a large optimization problem may be addressed using a variety of decomposition methods, or by constructing smaller representative weather-market price data sets that preserve the frequency and severity of extreme events [7].

6.3. Understanding the impact of uncertainty on economics

At least two significant sources of uncertainty directly impact CSP operations and economics: market prices and solar irradiation. Undoubtedly, this uncertainty impacts CSP operations and profitability. Several studies have demonstrated the ability of TES and/or supplemental heat sources to mitigate uncertainty in solar radiation and maintain electricity generation during cloudy periods. These benefits are typically reported as increased utilization of solar energy and/or increased capacity factor (see Table 4). Motivated by a negative correlation between solar irradiance and wind availability, Pousinho et al. [52,81] studied operational policies for hybrid wind-CSP systems. The authors estimated daily profits for 34,000 € for seven 50 MW_e CSP systems without storage in the Iberian Peninsula, compared with 75,000 € daily profit for the same system with 14 h of TES. Profits for the TES enabled CSP systems increased to 254,000 to 260,000 € through coordination with one hundred nearby 2 MW_e wind turbines [52]. A variety of mathematical models have been used to capture uncertainty in weather and price forecasts, including ARIMA [64,78], truncated Gaussian [82] and Weibull [52] probability distributions, and artificial neural networks [80]. These uncertainty models are typically used in conjunction with stochastic programming [78,82,101] and/or robust optimization [78,80,102] techniques to construct resilient CSP operating policies and bidding curves.

Despite this large body of work, the impacts of weather and market price uncertainties on CSP economic evaluations is not well understood. This is especially important, as improperly considered uncertainty may bias the impact of economic assessments. Sioshansi et al. [71] studied the value of forecasts for dispatch of large scale (order 1 GW) generic electrical storage devices in the PJM (Pennsylvania-Jersey-Maryland) market using historical data from 2002 to 2007. The authors considered both perfect information (actual historical prices in retrospect) and simple forecasts based on two previous weeks, and maximized the revenue for the storage device by determining the optimal times to purchase and sell energy and ancillary services. The authors found that the forecasting approach realized 85–90% of the theoretical maximum revenue but the impact will likely change with storage size, system flexibility and market participation (day-ahead vs. real-time). This type of analysis is critical for CSP economic assessments using historical weather and market price data but is typically not performed [14,62].

Economic evaluations of CSP systems without a supplemental heat source may be especially sensitive to uncertainties in weather forecasts. Due to the nature of the day-ahead market, a CSP operator must commit to providing energy and ancillary services approximately fifteen to forty hours in advance. If the operator is too aggressive and the weather is worse than anticipated, the CSP system may be unable to meet its awarded bid capacities and would incur penalties. Thus, it is likely that a CSP operator would hold back some stored thermal energy when participating in the day-ahead market and sell this excess energy on the real-time market in the evening after the weather uncertainties are realized. The interplay between solar availability, operational policies, risk tolerance, and economic performance are largely unstudied. Although robust optimization and stochastic programming have both been applied to manage these uncertainties, further work is required to fully capture complexities of the CSP system. For example, it is unclear how the approach used in [78] should be extended to consider two time scales for decision-making (bids into the day-ahead

and real-time markets) and correlations between both solar irradiance forecast errors and market price.

7. Concluding remarks

Electricity markets are undergoing paradigm shifts. The categorization of generation technologies as "baseload" and "peaking" is outdated and being replaced with a broad spectrum of exciting new technologies with different dynamic response and flexibility capabilities. LCOE based technology comparisons are being replaced with general economic assessment frameworks to understand revenue opportunities from multiscale electricity market signals. Several researchers have demonstrated significant revenue opportunities for CSP systems participating in electricity markets. In contrast, LCOE analysis neglects the time-varying value of electricity, and thus significantly undervalues energy storage relative to the market-based approaches. More general techno-economic assessments are necessary to understand the competitive advantages of CSP technologies relative to other renewable energy sources. To this effect, three research directions are identified to improve techno-economic assessments: i) standardization of models and methods, ii) new approaches for design and operational policy co-optimization, and iii) quantification of the impact of uncertainty and assumptions on economic assessments.

Acknowledgements

The authors would like to recognize The Dow Chemical Company for their generous financial support.

References

[1] Chien JCL, Lior N. Concentrating solar thermal power as a viable alternative in China's electricity supply. Energy Policy 2011;39:7622–36.
[2] Kaygusuz K. Prospect of concentrating solar power in Turkey: the sustainable future. Renew Sustain Energy Rev 2011;15:808–14.
[3] Purohit I, Purohit P. Techno-economic evaluation of concentrating solar power generation in India. Energy Policy 2010;38:3015–29.
[4] Iverson BD, Conboy TM, Pasch JJ, Kruizenga AM. Supercritical CO_2 brayton cycles for solar-thermal energy. Appl Energy 2013;111:957–70.
[5] Janjai S, Laksanaboonsong J, Seesaard T. Potential application of concentrating solar power systems for the generation of electricity in Thailand. Appl Energy 2011;88:4960–7.
[6] Morin G. Techno-economic design optimization of solar thermal power plants. [Ph.D. thesis], University of Braunschweig, Fraunhofer Verlag (2011).
[7] Zhang H, Baeyens J, Degrève J, Cacères G. Concentrated solar power plants: review and design methodology. Renew Sustain Energy Rev 2013;22:466–81.
[8] Behar O, Khellaf A, Mohammedi K. A review of studies on central receiver solar thermal power plants. Renew Sustain Energy Rev 2013;23:12–39.
[9] Coelho B, Oliveira AC, Mendes A. Concentrated solar power for renewable electricity and hydrogen production from water - a review. Energy Environ Sci 2010;3(10):1398–405.
[10] Kuravi S, Trahan J, Goswami DY, Rahman MM, Stefanakos EK. Thermal energy storage technologies and systems for concentrating solar power plants. Prog Energy Combust Sci 2013;39(4):285–319.
[11] Siva Reddy V, Kaushik SC, Ranjan KR, Tyagi SK. State-of-the-art of solar thermal power plants - A review. Renew Sustain Energy Rev 2013;27:258–73.
[12] Sheu EJ, Mitsos A, Eter AA, Mokheimer EMA, Habib MA, Al-Qutub A. A review of hybrid solar-fossil fuel power generation systems and performance metrics. J Sol Energy Eng 2012;134(4):041006.
[13] Astolfi M, Xodo L, Romano MC, Macchi E. Technical and economical analysis of a solar geothermal hybrid plant based on an Organic Rankine Cycle. Geothermics 2011;40:58–68.
[14] Lizarraga-Garcia E, Ghobeity A, Totten M, Mitsos A. Optimal operation of a solar-thermal power plant with energy storage and electricity buy-back from grid. Energy 2013;51:61–70.
[15] Kost C, Flath CM, Möst D. Concentrating solar power plant investment and operation decisions under different price and support mechanisms. Energy Policy 2013;61:238–48.
[16] Joskow PL. Comparing the cost of intermittent and dispatchable generation technologies. Am Econ Rev: Pap Proc 2011;100(3):238–41.
[17] Madaeni SH, Sioshansi R, Denholm P. How thermal energy storage enhances the economic viability of concentrating solar power. Proc IEEE 2012;100(2):335–47.
[18] Denholm P, Wan Y-h, Hummon M, Mehos M. An Analysis of Concentrating Solar Power with Thermal Energy Storage in a California 33% Renewable Scenario. Tech. rep., National Renewable Energy Labratory, Golden, Colorado, NREL/TP-6A20-58186 (2013).
[19] Brinkman G, Denholm P, Drury E, Ela E, Mai T, Margolis R, Mowers M. Grid Modeling for the SunShot Vision Study. Tech. Rep. February, National Renewable Energy Labratory, NREL/TP-6A20-53310 (2012).
[20] Denholm P, Hand M. Grid flexibility and storage required to achieve very high penetration of variable renewable electricity. Energy Policy 2011;39(3):1817–30.
[21] Drury E, Brinkman G, Denholm P, Margolis R, Mowers M. Exploring large-scale solar deployment in DOE's SunShot Vision Study, In: Proceedings of conference record of the IEEE photovoltaic specialists conference (2012) p. 763–8.
[22] Ardente F, Beccali G, Cellura M, Lo Brano V. Life cycle assessment of a solar thermal collector. Renew Energy 2005;30(7):1031–54.
[23] Laing D, Steinmann WD, Viebahn P, Grater F, Bahl C. Economic analysis and life cycle assessment of concrete thermal energy storage for parabolic trough power plants. J Sol Energy Eng 2010;132(4):041013.
[24] Desideri U, Zepparelli F, Morettini V, Garroni E. Comparative analysis of concentrating solar power and photovoltaic technologies: technical and environmental evaluations. Appl Energy 2013;102:765–84.
[25] Oró E, Gil A, de Gracia A, Boer D, Cabeza LF. Comparative life cycle assessment of thermal energy storage systems for solar power plants. Renew Energy 2012;44:166–73.
[26] Piemonte V, Falco MD, Tarquini P, Giaconia A. Life cycle assessment of a high temperature molten salt concentrated solar power plant. Sol Energy 2011;85(5):1101–8.
[27] Projected Costs of Generating Electricity, Tech. rep., International Energy Agency (2005).
[28] Dobos A, Gilman P. System advisor model. Tech. rep., National Renewable Energy Laboratory, NREL Report No. TP-6A20-53437 (2012).
[29] Blair N, Dobos AP, Freeman J, Neises T, Wagner M, Ferguson T, GP, Janzou S. System Advisor Model, SAM 2014.1. 14: General Description. Tech. rep., National Renewable Energy Laboratory, NREL/TP-6A20-61019 (2014).
[30] Klein S, et al. TRNSYS 17: A Transient System Simulation Program, Solar Energy Laboratory. University of Wisconsin - Madison (2010). URL ⟨http://sel.me.wisc.edu/trnsys⟩.
[31] System Advisor Model (SAM) Case study: Andasol-1. Tech. rep., National Renewable Energy Laboratory (2013).
[32] Boukelia TE, Mecibah MS, Kumar BN, Reddy KS. Investigation of solar parabolic trough power plants with and without integrated TES (thermal energy storage) and FBS (fuel backup system) using thermic oil and solar salt. Energy 2015;88:292–303.
[33] Boukelia TE, Mecibah MS, Kumar BN, Reddy KS. Optimization, selection and feasibility study of solar parabolic trough power plants for Algerian conditions. Energy Convers Manag 2015;101:450–9.
[34] Turchi C, Mehos M, Ho CK, Kolb GJ. Current and future costs for parabolic trough and power tower systems in the US market. Renew Energy 2010:11.
[35] Zhang Y, Smith SJ, Kyle GP, Stackhouse PW. Modeling the potential for thermal concentrating solar power technologies. Energy Policy 2010;38:7884–97.
[36] Wagner SJ, Rubin ES. Economic implications of thermal energy storage for concentrated solar thermal power. Renew Energy 2014;61:81–95.
[37] Spelling J, Favrat D, Martin A, Augsburger G. Thermoeconomic optimization of a combined-cycle solar tower power plant. Energy 2012;41:113–20.
[38] Beerbaum S, Weinrebe G. Solar thermal power generation in India a techno-economic analysis. Renew Energy 2000;21:153–74.
[39] Hernández-Moro J, Martínez-Duart JM. Analytical model for solar PV and CSP electricity costs: present LCOE values and their future evolution. Renew Sustain Energy Rev 2013;20:119–32.
[40] Lilliestam J, Bielicki JM, Patt AG. Comparing carbon capture and storage (CCS) with concentrating solar power (CSP): potentials, costs, risks, and barriers. Energy Policy 2012;47:447–55.
[41] Shinnar R, Citro F. Solar thermal energy: the forgotten energy source. Technol Soc 2007;29:261–70.
[42] Jorgenson J, Denholm P, Mehos M, Turchi C. Estimating the performance and economic value of multiple concentrating solar power technologies in a production cost model. Tech. rep., National Renewable Energy Labratory, NREL/TP-6A20-58645 (2013).
[43] Kolb GJ, Ho CK, Mancini TR, Gary JA. Power tower technology roadmap and cost reduction plan, Tech. rep., Sandia National Laboratories, SAND2011-2419 (2011).
[44] Nithyanandam K, Pitchumani R. Cost and performance analysis of concentrating solar power systems with integrated latent thermal energy storage. Energy 2014;64:793–810.
[45] Wang Z. Prospectives for China's solar thermal power technology development. Energy 2010;35:4417–20.
[46] Kosugi T, Pak PS. Economic evaluation of solar thermal hybrid H_2O turbine power generation systems. Energy 2003;28:185–98.
[47] Hosseini REZA, Soltani M, Valizadeh G. Technical and economic assessment of the integrated solar combined cycle power plants in Iran. Renew Energy 2005;30:1541–55.
[48] Timilsina GR, Kurdgelashvili L, Narbel PA. Solar energy: markets, economics and policies. Renew Sustain Energy Rev 2012;16:449–65.
[49] Williges K, Lilliestam J, Patt A. Making concentrated solar power competitive with coal: the costs of a European feed-in tariff. Energy Policy 2010;38:3089–97.
[50] Trieb F, Müller-Steinhagen H, Kern J. Financing concentrating solar power in the Middle East and North Africa - Subsidy or investment?. Energy Policy 2011;39:307–17.
[51] Powell KM, Edgar TF. Modeling and control of a solar thermal power plant with thermal energy storage. Chem Eng Sci 2012;71:138–45.
[52] Pousinho H, Silva H, Mendes V, Collares-Pereira M, Pereira Cabrita C. Self-

scheduling for energy and spinning reserve of wind/CSP plants by a MILP approach. Energy 2014;78:524–34.
[53] Glatzmaier G. Developing a Cost Model and Methodology to Estimate Capital Costs for Thermal Energy Storage. Tech. rep., National Renewable Energy Laboratory, NREL/TP-5500-53066 (2011).
[54] Ho C, Mehos M, Turchi C, Wagner M. Probabilistic analysis of power tower systems to achieve sunshot goals. Energy Procedia 2014;49:1410–9.
[55] Wall M. GAlib: A C++ library of genetic algorithm components (1996).
[56] Schwarzbözl P, Pitz-Paal R, Schmitz M. Visual HFLCAL - a software tool for layout and optimisation of heliostat fields. in: Proceedings of Solar PACES 2009, 2009.
[57] Mediratta RK, Pandya V, Khaparde SA. Power Markets Across the Globe and Indian Power Market, no. December, IIT Bombay, 2008, p. 271–5.
[58] Andreas A, Stoffel T. Tech. rep., University of Nevada (UNLV), NREL Report No. DA-5500-56509 (2006) [link]. URL ⟨https://www.nrel.gov/midc/unlv/⟩.
[59] Loisel R, Mercier A, Gatzen C, Elms N. Market evaluation of hybrid wind-storage power systems in case of balancing responsibilities. Renew Sustain Energy Rev 2011;15(9):5003–12.
[60] Walling RA. Analysis of Wind Generation Impact on ERCOT Ancillary Services Requirements, Tech. rep., GE Energy (2008).
[61] Kirby B, O'Malley M, Ma O, Cappers P, Corbus D, Kiliccote S, Onar O, Starke M, Steinbergy D. Load Participation in Ancillary Services (Workshop Report). Tech. Rep. December, U.S. Deparment of Energy (2011).
[62] Usaola J. Operation of concentrating solar power plants with storage in spot electricity markets. IET Renew Power Gener 2012;6(1):59–66.
[63] González JL, Dimoulkas I, Amelin M. Operation planning of a CSP plant in the spanish day-ahead electricity market. In: Proceedings of the 11th International Conference on the European Energy Market (EEM), 2014, pp. 1–5.
[64] Wittmann M, Eck M, Pitz-Paal R, Müller-Steinhagen H. Methodology for optimized operation strategies of solar thermal power plants with integrated heat storage. Sol Energy 2011;85(4):653–9.
[65] Oudalov A, Chartouni D, Ohler C. Optimizing a battery energy storage system for primary frequency control. IEEE Trans Power Syst 2007;22(3):1259–66.
[66] Ekman CK, Jensen SH. Prospects for large scale electricity storage in Denmark. Energy Convers Manag 2010;51(6):1140–7.
[67] Walawalkar R, Apt J, Mancini R. Economics of electric energy storage for energy arbitrage and regulation in New York. Energy Policy 2007;35(4):2558–68.
[68] Sortomme E, El-Sharkawi MA. Optimal scheduling of vehicle-to-grid energy and ancillary services. IEEE Trans Smart Grid 2012;3(1):351–9.
[69] Fares RL, Meyers JP, Webber ME. A dynamic model-based estimate of the value of a vanadium redox flow battery for frequency regulation in Texas. Appl Energy 2014;113:189–98.
[70] Khalilpour R, Vassallo A. Planning and operation scheduling of PV-battery systems: a novel methodology. Renew Sustain Energy Rev 2016;53:194–208.
[71] Sioshansi R, Denholm P, Jenkin T, Weiss J. Estimating the value of electricity storage in PJM: arbitrage and some welfare effects. Energy Econ 2009;31(2):269–77.
[72] Powell KM, Hedengren JD, Edgar TF. Dynamic optimization of a solar thermal energy storage system over a 24 hour period using weather forecasts. In: Proceedings of American Control Conference, 2013, p. 2946–51.
[73] Powell KM, Hedengren JD, Edgar TF. Dynamic optimization of a hybrid solar thermal and fossil fuel system. Sol Energy 2014;108:210–8.
[74] Camacho EF, Gallego AJ. Optimal operation in solar trough plants: a case study. Sol Energy 2013;95:106–17.
[75] Slocum AH, Codd DS, Buongiorno J, Forsberg C, McKrell T, Nave JC, et al. Concentrated solar power on demand. Sol Energy 2011;85(7):1519–29.
[76] Nicolosi M. Wind power integration and power system flexibility—an empirical analysis of extreme events in Germany under the new negative price regime. Energy Policy 2010;38(11):7257–68.
[77] Dowling AW, Dyreson A, Miller F, Zavala VM. Economic assessment and optimal operation of CSP systems with TES in California electricity market, Proceedings of the 22nd SolarPACES international conference (2017).
[78] Dominguez R, Baringo L, Conejo A. Optimal offering strategy for a concentrating solar power plant. Appl Energy 2012;98:316–25.
[79] Patnode AM. Simulation and performance evaluation of parabolic trough solar power plants, Masters of Science, University of Wisconsin-Madison (2006).
[80] Pousinho H, Contreras J, Pinson P, Mendes V. Robust optimisation for self-scheduling and bidding strategies of hybrid CSP fossil power plants. Int J Electr Power Energy Syst 2015;67:639–50.
[81] Pousinho H, Esteves J, Mendes V, Collares-Pereira M, Pereira Cabrita C. Bilevel approach to wind-CSP day-ahead scheduling with spinning reserve under controllable degree of trust. Renew Energy 2016;85:917–27.
[82] Poland J, Stadler KS. Stochastic Optimal Planning of Solar Thermal Power. In: Proceedings of IEEE Conference on Control Applications (CCA), 2014, p. 593–8.
[83] Martín L, Martín M. Optimal year-round operation of a concentrated solar energy plant in the south of Europe. Appl Therm Eng 2013;59(1–2):627–33.
[84] Martín M. Optimal annual operation of the dry cooling system of a concentrated solar energy plant in the south of Spain. Energy 2015;84:774–82.
[85] Vidal M, Martín M. Optimal coupling of a biomass based polygeneration system with a concentrated solar power facility for the constant production of electricity over a year. Comput Chem Eng 2015;72:273–83.
[86] Ghobeity A, Mitsos A. Optimal design and operation of a solar energy receiver and storage. J Sol Energy Eng 2012;134(3):031005.
[87] Li X, Chen Y, Barton PI. Nonconvex generalized benders decomposition with piecewise convex relaxations for global optimization of integrated process design and operation problems. Ind Eng Chem Res 2012;51(21):7287–99.
[88] Zhu D, Hug G. Decomposed stochastic model predictive control for optimal dispatch of storage and generation. IEEE Trans Smart Grid 2014;5(4):2044–53.
[89] Chiang N, Petra CG, Zavala VM. Structured nonconvex optimization of large-scale energy systems using PIPS-NLP. In: Proceedings of the 18th power systems computation conference (PSCC), Wroclaw, Poland, 2014.
[90] Chiang N, Zavala V. An inertia-free filter line-search algorithm for large-scale nonlinear programming. Comput Optim Appl 2016;64:327–54.
[91] Kim K, Zavala VM. Algorithmic innovations and software for the dual decomposition method applied to stochastic mixed-integer programs, Technical Report, Argonne National Laboratory.
[92] Manenti F, Ravaghi-Ardebili Z. Dynamic simulation of concentrating solar power plant and two-tanks direct thermal energy storage. Energy 2013;55:89–97.
[93] Henrion T, Ponweiser K, Band D, Telgen T. Dynamic simulation of a solar power plant steam generation system. Simul Model Pract Theory 2013;33:2–17.
[94] Queralt AB. Dynamic modeling of a steam Rankine Cycle for concentrated solar power applications, Master's thesis, University of Liege (2014).
[95] Singh R, Miller SA, Rowlands AS, Jacobs PA. Dynamic characteristics of a direct-heated supercritical carbon-dioxide Brayton cycle in a solar thermal power plant. Energy 2013;50(1):194–204.
[96] Nyström RH, Harjunkoski I, Kroll A. Production optimization for continuously operated processes with optimal operation and scheduling of multiple units. Comput Chem Eng 2006;30:392–406.
[97] Flores-Tlacuahuac A, Biegler LT. Simultaneous mixed-integer dynamic optimization for integrated design and control. Comput Chem Eng 2007;31:588–600.
[98] Chu Y, You F. Integration of production scheduling and dynamic optimization for multi-product CSTRs: generalized benders decomposition coupled with global mixed-integer fractional programming. Comput Chem Eng 2013;58:315–33.
[99] Baldea M, Harjunkoski I. Integrated production scheduling and process control: a systematic review. Comput Chem Eng 2014;71:377–90.
[100] Du J, Park J, Harjunkoski I, Baldea M. A time scale-bridging approach for integrating production scheduling and process control. Comput Chem Eng 2015;79:59–69.
[101] Plazas MA, Conejo AJ, Prieto FJ. Multimarket optimal bidding for a power producer. IEEE Trans Power Syst 2005;20(4):2041–50.
[102] Baringo L, Conejo AJ. Offering strategy via robust optimization. IEEE Trans Power Syst 2011;26(3):1418–25.